TECO Westinghouse	OUTLINE DIMENSIONS	MOTOR TYPE: DVHM—NF18K5LA010
DATE June 11, 2020	PERMANENT MAGNET MOTOR	FRAME NO. 284TC

Pole	HP	kW	Hz	VOLT	r/min(rpm)
6	25	18.5	60	230/460	1800

Ins	Rating	Dimension in	Approx Weight	Bearings
F	CONT.	inch	299.0 lbs	DE:6311ZZ NDE:6310ZZ

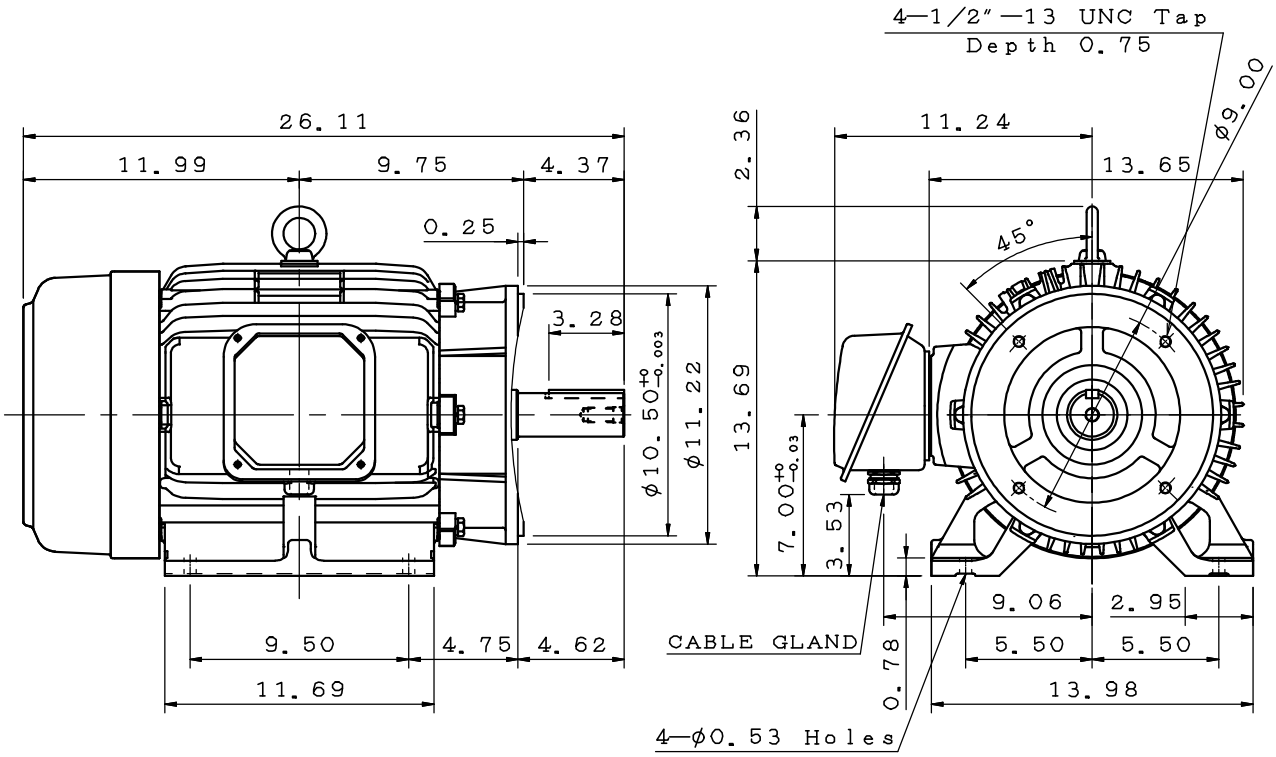

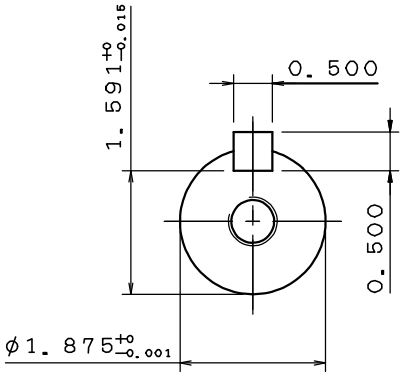

Note:
1. IP55 Protection.
2. Indoor Service.
3. CABLE GLAND(PF1 1/2″)
   SUITABLE FOR RANGE
   φ1.22~φ1.61

PMTWMC202006 01—01—00

0	.			.

DWG.	梁志豪	06•02•20	TECO Westinghouse	DWG NO. 31057M046120
CHKD.	梁志豪	06•04•20		
APPD.	王祈欣	06•04•20		