575 Rated Voltage, 600 Max Voltage, Low Z, Impedance.								
Part Number	Horsepower (HP)	Motor Amps (A)	Maximum Amps (A)	Inductance (uH)	Weight (LBS)	Losses (W)	Available Lug Kit	Terminal Hole Size (Inches)
KDRI42LE01	200	192	192	146	116	342	SLK11	0.38

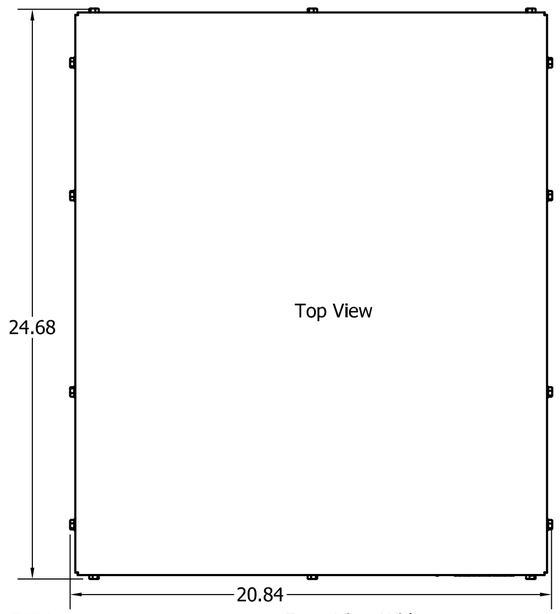

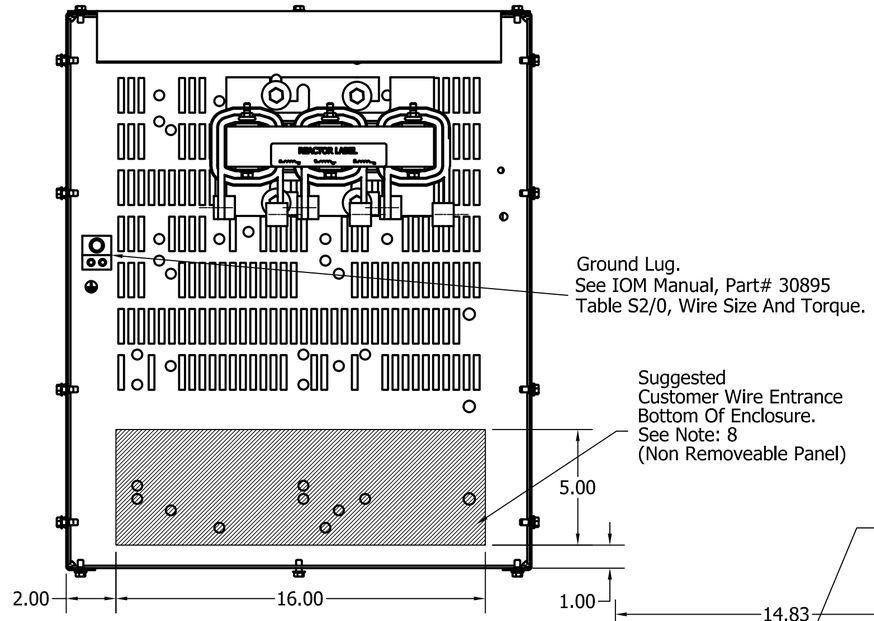

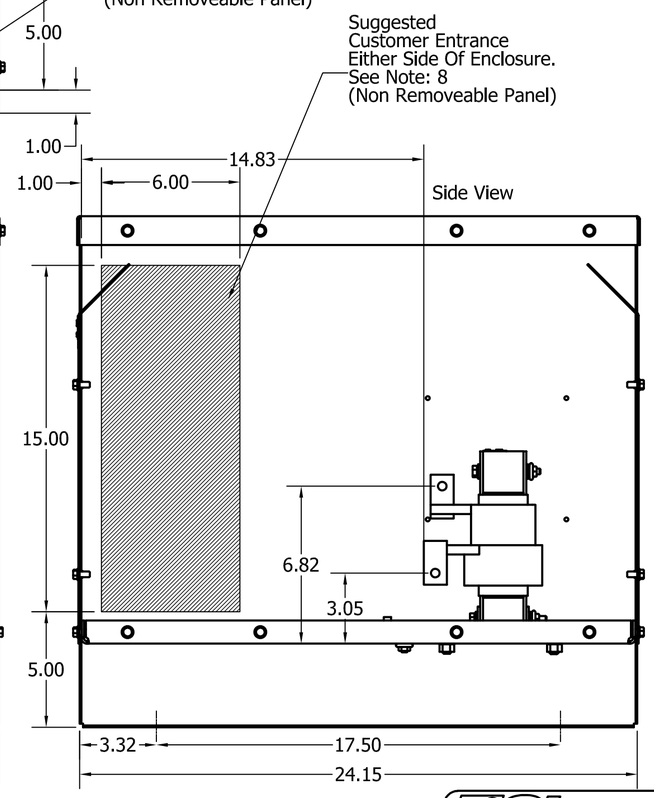

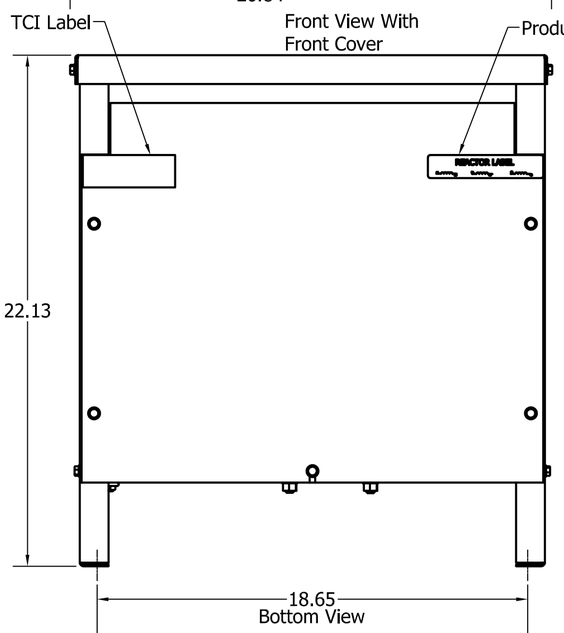

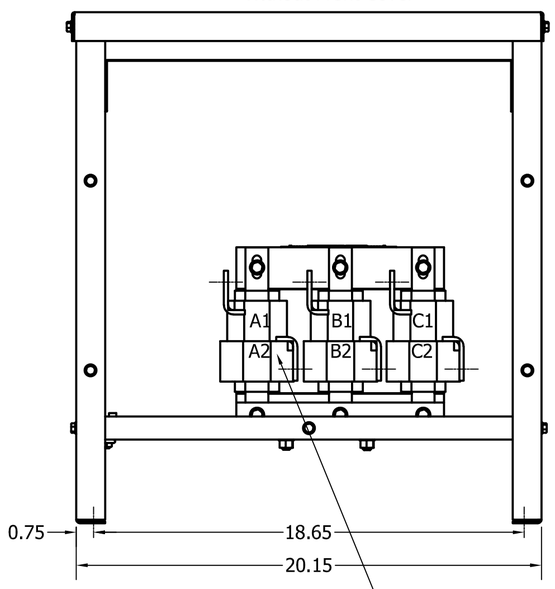

(Customer Connections)
Markings On Coils
For Reference Only.

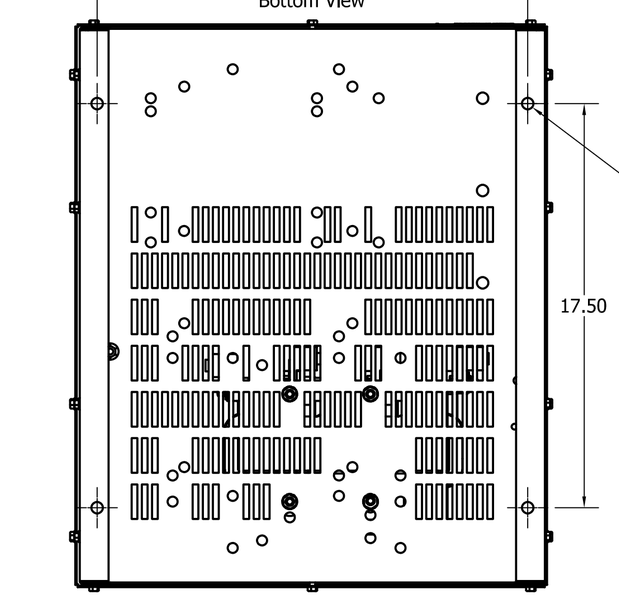

Wiring Diagram

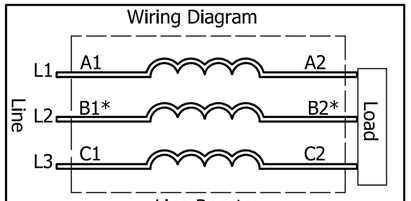

Line Reactor

* For single phase applications, use coils A and C, Isolate terminals B1 and B2.

TCI
TCI, LLC
Germantown, WI. USA.
transcoil.com
800-824-8282
DATE CODE

(800) 824-8282 transcoil.com

KDRUL Drive Reactor
KDR-- Motor Amps --
3PH, 50/60Hz,---V Rated, 600V Max, --A Max
40C Amb Max, 155C Rise, RoHS
Manual #30895 LUG KIT #SLK--

US LISTED
IND CONT. EQ. 89A6

A1 A2 B1 B2 C1 C2

Notes:

1. KDR Lug Kits sold separately. Contact TCI.
2. For KDRUL Version With Terminal Lugs Attached, See Sheet 8
3. UL file number: cULus Listed File E116124.
4. KDR Drive Reactors Comply With The Thermal and Altitude Standards Set Forth by NEMA ST20-1992.
5. KDR IOM Manual Part Number 30895
6. NEC Current For 208/240 Volts, Horsepower Based On 208 Volts.
7. Material(s) Shall be RoHS Compliant
8. Customer Is Responsible For Installation To Meet All National And Local Electrical Codes.

TCI, LLC CLAIMS PROPRIETARY RIGHTS IN THE MATERIAL HEREIN DISCLOSED. IT IS SUPPLIED WITHOUT PREDJUDICE TO ANY PATENT RIGHTS OF TCI AND MAY NOT BE REPRODUCED OR USED TO MANUFACTURE ANYTHING SHOWN THEREIN WITHOUT WRITTEN PERMISSION FROM TCI.

NO	REVISION	DATE	BY

TOLERANCES (EXCEPT AS NOTED)
DECIMAL .XX ± .25 .XXX ± .10
FRACTIONAL ± 1/16
ANGULAR ± 1°

TCI
W132 N10611 Grant Drive
Germantown, WI 53022

KDR I Frame, Copper Bus, Enclosed
Type 1, Reactor Drawing

DRN. BY DSW | DATE: 3/21/18 | 107612DG
SCALE: 1/5 | APRVD: | SIZE C | SHT.7 OF 8