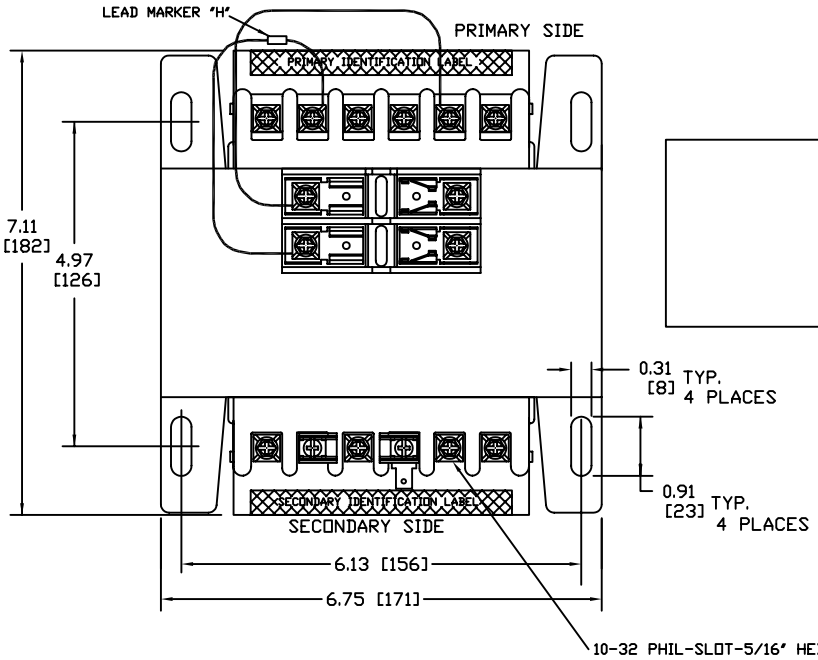

CONNECTION TABLE LABEL

INPUT VOLTAGE			OUTPUT VOLTAGE	
H4-H3	H4-H2	H4-H1	XF-X2	XF-X1
--	240	480	25	120
208	230	460	24	115
200	220	440	23	110

NOTE: IF BOTH OUTPUTS ARE USED SIMULTANEOUSLY, FUSING SHOULD BE DONE OFF OF THE TRANSFORMER, WITH X3 REPLACING XF.

Transformer Specifications	
PRIMARY VOLTAGE(S)	208/230/460 (TRIPLE)
SECONDARY VOLTAGE(S)	24/115
RATED V.A.	750
RATED FREQUENCY	50/60
INSULATION CLASS	130
AGENCY APPROVALS	UL, CUL
ESTIMATED WEIGHT	38.6 LBS

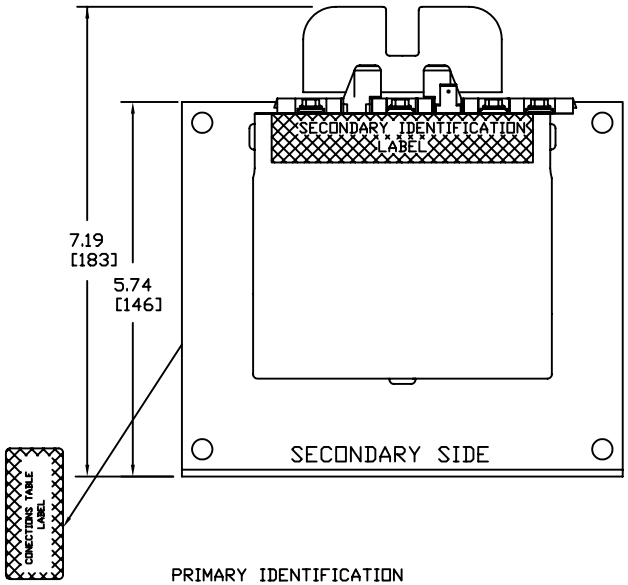

PRIMARY IDENTIFICATION LABEL

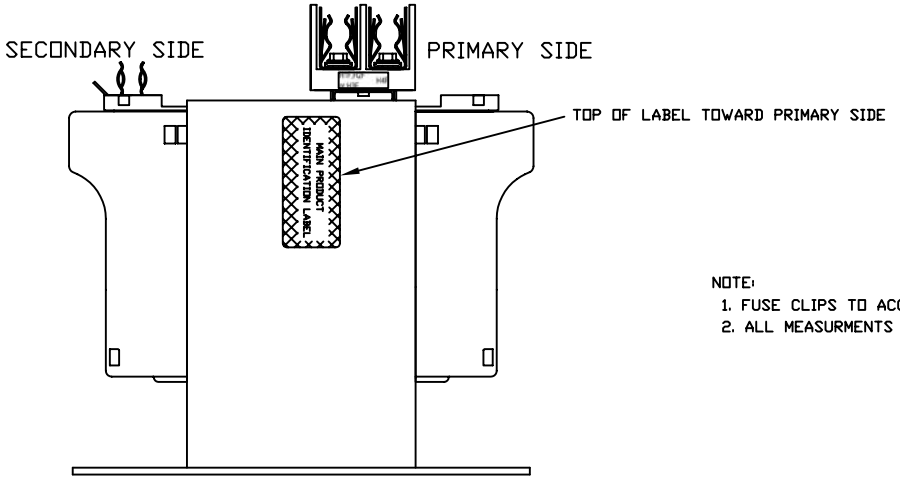

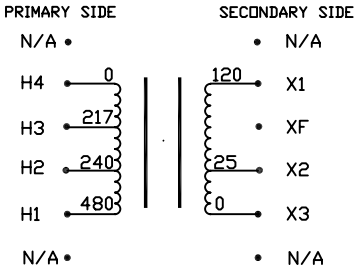

CONNECTION DIAGRAM

NOTE:
1. FUSE CLIPS TO ACCOMADATE 13/32-1 1/2"
2. ALL MEASURMENTS IN INCHES (MM)

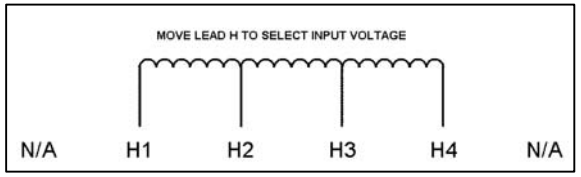

SECONDARY IDENTIFICATION LABEL

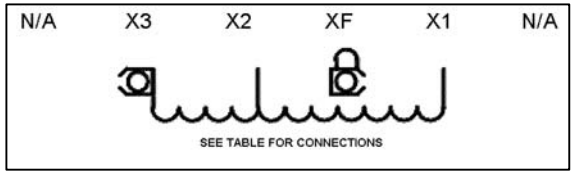

MAIN PRODUCT IDENTIFICATION LABEL

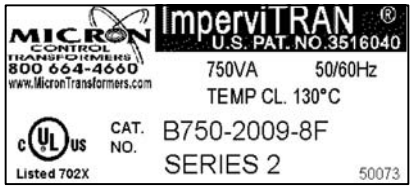

PACKAGED ACCESSORIES	
1	
–	–
–	–

MICRON INDUSTRIES CORPORATION
777 CHURCH ROAD – ELMHURST, IL 60126
Tel. (800)664-4660, (630)516-1222 Fax (630)516-1820
www.MicronTransformers.com

DATE	DRAWN	CHECKED	APPROVED
12/18/07	J.G.V		

RELEASE DATE | CUSTOMER PART NO.

MICRON PART NO.

SIZE C | SCALE NONE | B750-2009-8F